AV10

KINETIC / VACUUM BREAKING AIR VALVE

The AV-010 Air & Vacuum Valve discharges air at high flow rates during the filling of the system and admits air at high flow rates during drainage, pump shut-off or at water column separation.





¾", 1" model



2" model

High durability

Simple opertaion

Maximum reliability

Benefits & Features

→ High durability	Made of high strength composite materials, and all operating parts are made of specially selected corrosion-resistant and UV resistant materials
→ Simple opertaion	Lightweight and small dimensions
→ Maximum reliability	For all parts
→ Drip-tight	Sealing at low pressure

Specifications & Recommendations

- **Working Pressure Range** – 0.2 - 10bar
- **Testing Pressure** – 16bar
- **Working Temperature** – 60ºC
- **Maximum Intermittent Temperature** – 90°C
- Available in ¾" (20mm), 1" (25mm) male threaded, 2" (50mm), 3" (80mm) female threaded NPT/BSPT
- **Optional Addition** – Shrader valve for measuring local line pressure (3/4", 1" only)

Technical Dimensions

Nominal Size	Dimensions (mm)		Weight (gr)	Orifice Area (mm^2)
	A	B		
¾" (20mm)	60	124	0.1	314
1" (25mm)	60	124	0.1	314
2" (50mm)	73	122	0.2	800
3" (80mm)	104	165	0.6	2000

Material Specifications

#	Part Name	¾", 1"	2"	3"
1	Cover	Polypropylene	Polypropylene	Polypropylene
2	Seal	BUNA-N	EPDM	EPDM
3	Float	Polypropylene	Reinforced nylon	Reinforced nylon
4	Body	Polypropylene	Reinforced nylon	Reinforced nylon
5	Disc	-	Reinforced nylon	Reinforced nylon

¾", 1" Model

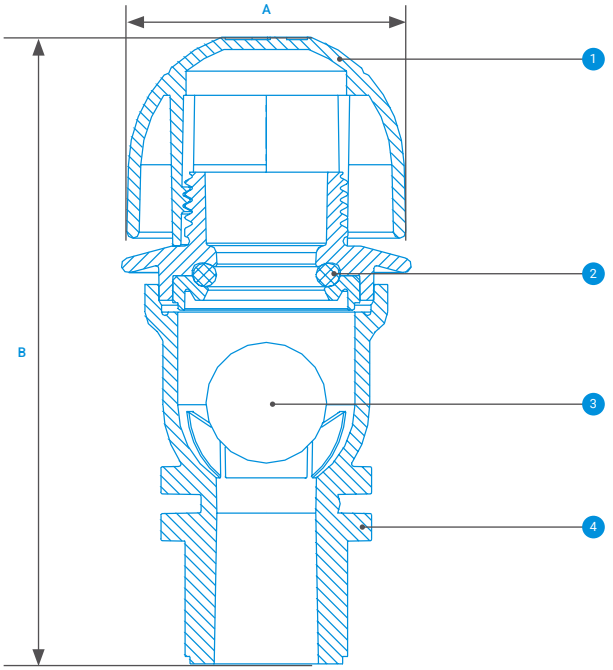

2" Model

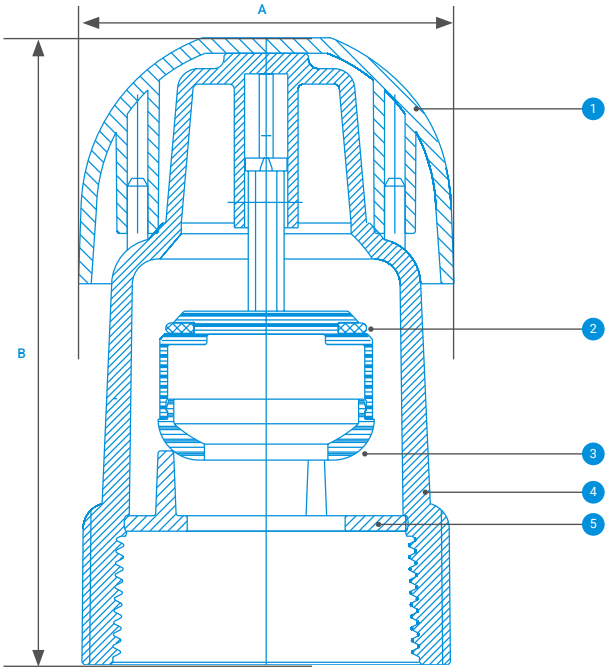

Head Loss

Air & Vacuum Flow Rate

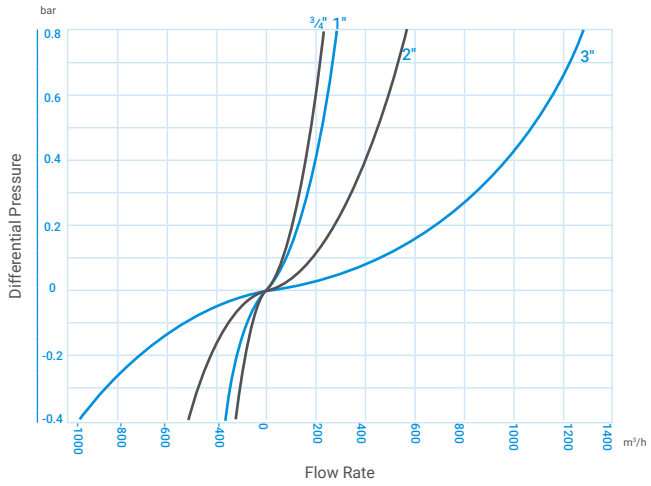

Catalog Numbers

Model	Diameter	Connection	Max. Pressure	Catalog Number
AV10	¾"	BSP	PN10	70540-001300
		NPT	PN10	70561-002950
	1"	BSP	PN10	70540-001400
		NPT	PN10	70561-002610
	2"	BSP	PN10	70540-001500
		NPT	PN10	70561-002720
	3"	BSP	PN10	70540-001550
		NPT	PN10	70561-002820