NAVk

KINETIC / VACUUM BREAKING VALVE

This valve has been designed for efficient discharge and intake of air in water transport systems, filtering systems, containers, and other locations where confined air could impair the system's operation.





Maximum reliability

Superior design

Ease of maintenance

Benefits & Features

→ Maximum reliability

The valve offers leak-proof sealing even at a low system pressure

→ Superior design

- The aerodynamic design of the valve enables air flow at very high velocities
- The outlet port directs the "blowout" flow away, protecting sensitive devices and the operators

→ Ease of maintenance

The valve design contains a very limited number of parts, allowing easy dismantling for maintenance

Specifications & Recommendations

- **Operating Pressure** – 0.1 to 10bar / 1½ to 150psi
- **Maximal Operating Temperature** – 60°C / 140°F
- **2" BSP or NPT Threaded Base** – As per the customer's choice
- **Materials** – Corrosion-resistant reinforced plastic materials and synthetic rubber

→ Technical Dimensions

Valve	20 mm / ¾"		25 mm / 1"		50 mm / 2"	
Dimension	SI	US	SI	US	SI	US
D - Thread	¾" BSP	¾" "NPT	1" BSP	1" NPT	2" BSP	2" NPT
H - Height	132mm	5.2"	132mm	5.2"	132mm	5.2"
A - Nozzle Area	380mm²	0.59 in²	380mm²	0.59in²	804mm²	1.25 in²
Weight	125g	0.27lbs.	125g	0.27lbs.	200g	0.4lbs.

→ Material Specifications

¾", 1"

#	Part Name	Material
1	Base	PA GF
2	O ring	NBR
3	Body	PA GF
4	Float	POM
5	Seal	EPDM
6	Cover	POM

2"

#	Part Name	Material
1	Body	PA GF
2	Ring	PA GF
3	Float	POM
4	Seal	EPDM
5	Cover	PA GF

¾", 1"

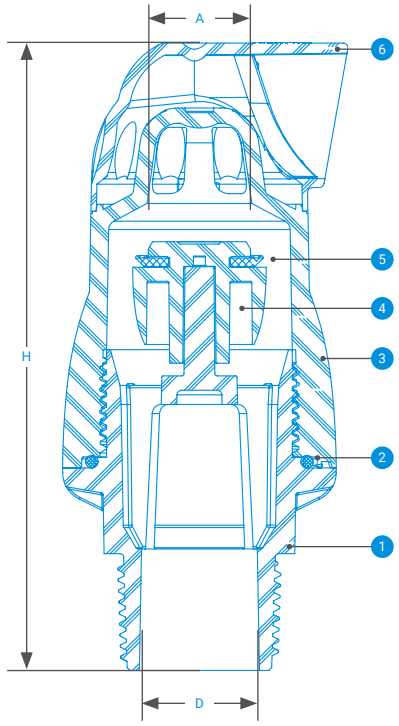

2"

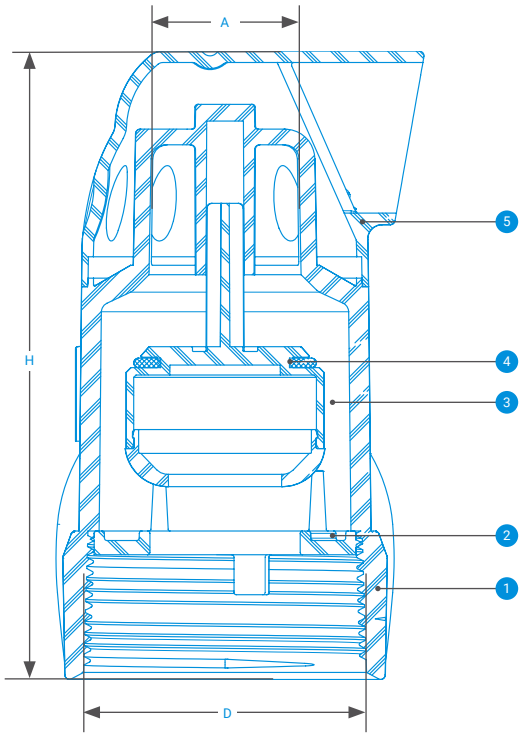

→ Head Loss

Discharge Data - Free Air Flow - ¾", 1"

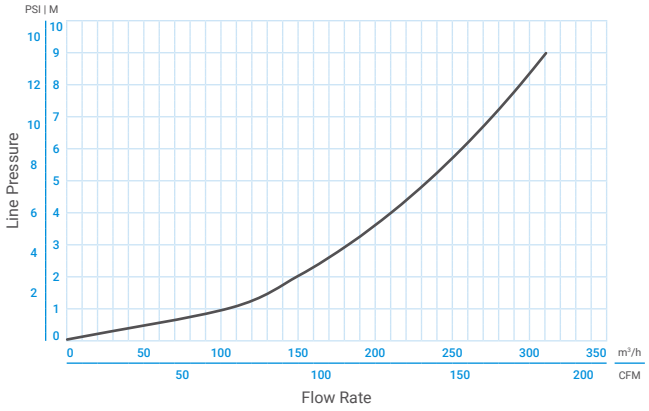

Discharge Data - Free Air Flow - 2"

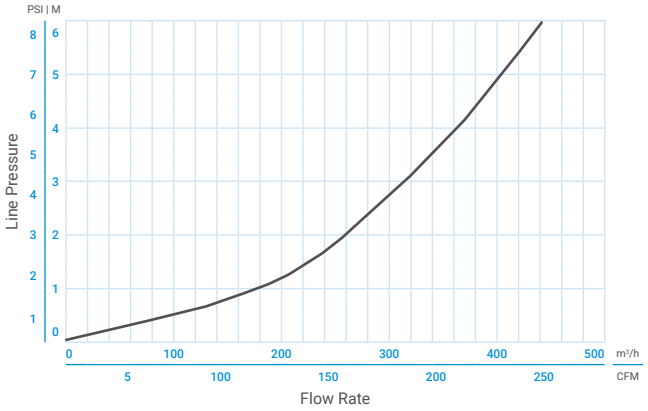

Inflow Data - Free Air Flow - ¾", 1"

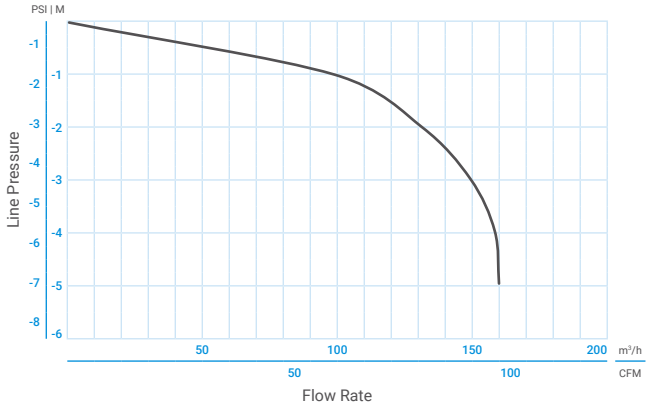

Inflow Data - Free Air Flow - 2"

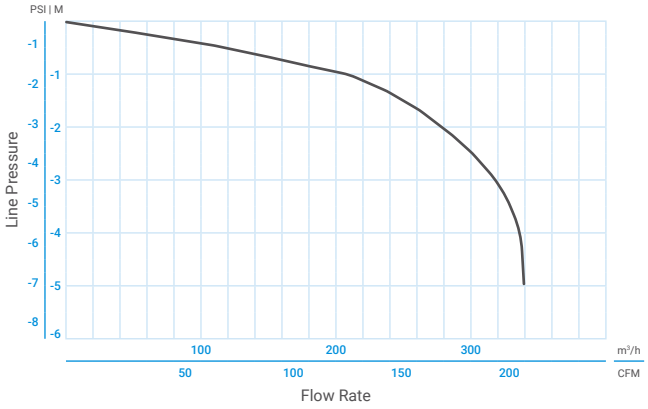

→ Catalog Numbers

Diameter	Connection	Catalog Number
¾"	BSP	32600-005912
	NPT	32600-006000
1"	BSP	32600-006004
	NPT	32600-006001
2"	BSP	32600-006003
	NPT	32600-006002