AquaNet™ Electric Valves

The professional electric/hydraulic valve line. Suitable for landscape and greenhouse applications.





1½" - 2" model



¾" - 1" model

Energy saving

Long distance operation

3 position knob, On/Off/Auto

Benefits & Features

→ Great features	Patented hydraulic 3-way control For all types of water
→ All water types	Designed to operate with all types of water, including effluent (2mm command orifice)
→ Outstanding	pressure and flow range
→ Manual override	Close / Auto / Open
→ Low energy consumption	for maximal wire distance
→ Built-in	pressure regulator with adjustable knob 0.7 – 4.5bar (optional 1½" & 2" Electrical models only)
→ Flow control handle	Standard on all models
→ EPDM diaphragm	Resistant against chemicals used in agriculture

Specifications & Recommendations

¾" & 1" Globe Models

- **Working Pressure** – 0.2 - 10 bar
- **Ambient Temp. Max.** – 60°C (140°F)
- **Fluid Temp Max.** – 60°C (140°F)
- **Plastic Parts** – Reinforced Nylon
- **Diaphragms** – EPDM
- **Leads** – 2 x AWG 22 (8cm)

1½" & 2" Globe & Angle Models

- **Working Pressure** – 0.3 - 10 bar
- **Ambient Temp. Max.** – 60°C (140°F)
- **Fluid Temp Max.** – 60°C (140°F)
- **Plastic Parts** – Reinforced Nylon
- **Diaphragms** – EPDM
- **Leads** – 2 x AWG 22 (120cm)

* Pressure Regulating Range: 0.7-4.5 bar (1½" & 2" only)

Packaging Data

Model	Quantity P/Box (Units)	Box Dimensions (cm x cm x cm)	Box Weight (Kg, average)
Aquanet Plus ¾", 1"	12	47.0 x 26.0 x 12.0	4.45
Aquanet Plus 1½" G	1	21.5 x 12.5 x 19	1.18
Aquanet Plus 1½" A			1.29
Aquanet Plus 2" G			1.16
Aquanet Plus 2" A			1.24
Pressure Regulator Kit		12.0 x 9.0 x 7.0	0.11

Electrical Specifications

24v AC

Voltage	18-28VAC
Inrush	90ma
Holding	75ma

In AC models, 2-5 seconds delay from command to activation

Note: Operating within the specified voltage range outlined above is crucial to ensure the proper functionality of the product

Cable Gauge (awg)	Diameter (mm)	Cross Section (mm^2)	Max. Distance (m)
20	0.8	0.5	1250
18	1.0	0.8	2000
17	1.1	1.0	2500
16	1.3	1.3	3500
15	1.4	1.5	5000

Max. distance between Aquanet Plus AC and controllers

DC

Voltage	12-40 VDC
Min. Pulse Width	80ms

Recommended working condition capacitor mode

Voltage (VDC)	Capacitor (µf)	Min. Pulse (ms)
12-18	4700	80
18-28	3300	80
28-40	2200	80

Cable Gauge (awg)	Diameter (mm)	Cross Section (mm^2)	Max. Distance (m)
20	0.8	0.5	150
17	1.1	1.0	240
15	1.4	1.5	380

Electrical Connections

¾" & 1" DC red + black common
¾" & 1" AC black/black
1 ½" & 2" DC red + black common
1 ½" & 2" AC black/black
(Changing DC connection wire will change NC to no)
It is recommended to isolate wires connections from water to prevent corrosion.
AquaNet™ is compatible with most DC latch controllers with two or three wire output. For specific models, please contact your Netafim representative.

→ Technical Dimensions

¾" & 1" Models

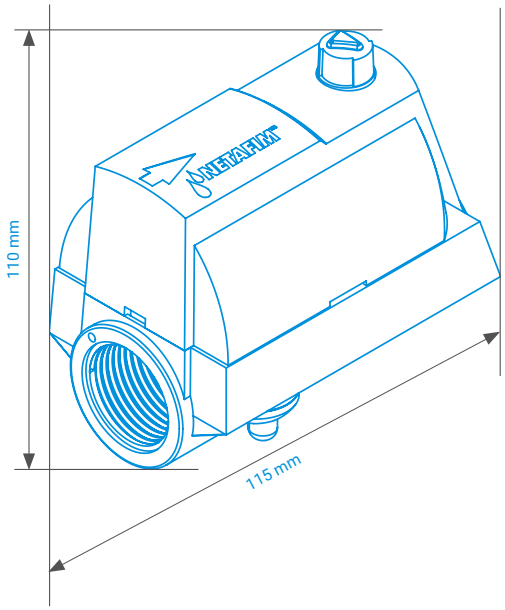

1½" & 2" Models

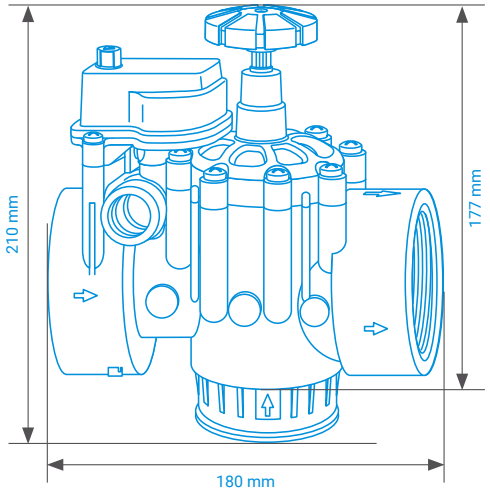

→ Catalog Numbers

Diameter	Connection Type	Input	Shape	Catalog Number without Regulator	Catalog Number with Regulator
¾"	BSP	AC	Straight	34000-001000*	
		DC	Straight	34500-001000*	
1"		AC	Straight	34000-001100*	
		DC	Straight	34500-001100*	
1½"		AC	Angle	34040-001000	34020-001000
			Globe	34040-001100	34020-001100
		DC	Angle	34540-001000	34520-001000
			Globe	34540-001100	34520-001100
2"		AC	Angle	34040-001200	34020-001200
			Globe	34040-001300	34020-001300
		DC	Angle	34540-001200	34520-001200
			Globe	34540-001300	34520-001300

* With flow control

→ Head Loss (m) Flow m³/h

		Flow																		
Model	Pattern	1	2	3	4	6	8	10	12	14	16	18	20	22	24	26	28	30	32	34
¾"	G	1.00	1.30	2.00	2.50	4.50	-	-	-	-	-	-	-	-	-	-	-	-	-	-
1"	G	1.00	1.30	2.00	2.40	4.00	-	-	-	-	-	-	-	-	-	-	-	-	-	-
1½"	G	0.52	0.64	0.77	0.92	1.28	1.70	2.21	2.79	3.46	4.22	5.06	6.00	7.00	8.17	9.41	10.75	12.20	13.77	15.46
	A	0.90	0.93	0.98	1.05	1.23	1.48	1.80	2.18	2.64	3.18	3.79	4.49	5.26	6.12	7.06	8.08	9.20	10.40	11.70
	A-G	0.00	0.10	0.40	0.70	1.30	1.92	2.57	3.25	3.98	4.76	5.61	6.53	7.54	8.64	9.84	11.16	12.60	14.17	15.90
	HYG	0.36	0.36	0.42	0.43	0.72	1.06	1.49	2.04	2.68	3.44	4.30	5.26	6.33	7.50	8.77	10.15	11.63	13.22	14.90
	HYA	-	-	0.00	0.00	0.30	0.57	0.87	1.21	1.60	2.04	2.52	3.05	3.63	4.26	4.94	5.67	6.45	7.28	8.18
2"	G	0.63	0.74	0.86	1.00	1.33	1.71	2.16	2.69	3.28	3.96	4.72	5.56	6.50	7.54	8.67	9.91	11.26	12.72	14.30
	A	1.41	1.30	1.23	1.18	1.15	1.23	1.41	1.68	2.04	2.50	3.03	3.65	4.35	5.12	5.97	6.88	7.85	8.89	9.99
	A-G	1.40	1.69	1.97	2.25	2.80	3.35	3.92	4.50	5.12	5.77	6.48	7.24	8.00	8.99	9.98	11.09	12.30	13.60	15.06
	HYG	-	-	-	0.00	0.38	0.83	1.34	1.93	2.60	3.34	4.16	5.07	6.06	7.15	8.33	9.60	10.97	12.45	14.02
	HYA	-	0.02	0.06	0.12	0.27	0.47	0.73	1.04	1.40	1.81	2.28	2.80	3.36	3.98	4.65	5.37	6.14	6.96	7.84

* G = Globe =, A = Angle, A-G = Angle valve globe flow, HYG = Hydraulic globe valve, HYA = Hydraulic angle valve